Review Article

New Insights into Circadian Aspects of Health and Disease

RB Singh*, D Pella**, Kuniaki Otsuka***, F Halberg+, G Cornelissen+

Abstract

- **Early awakening and early to bed as well as good conduct, thought, diet, interpersonal dealings and physical activity have been suggested for healthy life in Ayurveda. Circadian rhythms, coordinated in part by the parietal hypothalamic-pituitary and adrenal mechanisms, have been reported in almost all variables examined thus far, including the circulation. It is possible that all metabolic functions undergo circadian rhythms. It remains to be explored whether these rhythms may be optimized by *Ayurvedic* practices. The onsets of myocardial ischemia, unstable angina, acute myocardial infarction, sudden cardiac death, and strokes have been reported to exhibit a circadian variation, with increased frequency in the second quarter of the day. An increased physical and mental load caused by an attempt to prepare for the day may be important in triggering acute cardiovascular events. Depending on their timing, meditation (*Ayurvedic* practice), n-3 fatty acids, coenzyme Q10, beta-blockers and estrogens may have beneficial effects, whereas progestins and mental load may have adverse effects on heart rate and blood pressure variability, which may be expressed by different circadian patterns. Around the clock serial recordings of blood pressure and heart rate during usual activities and lifestyles may be recorded and may be analyzed by computer-implemented curve fitting to assess the about 24-hour (circadian) variation, among other rhythmic, chaotic, and trend components of the time structure (chronome) of these variables. The new disease risk syndrome circadian hyper-amplitude-tension (CHAT), a condition characterized by an excessive circadian amplitude of blood pressure, cannot be ascertained on the basis of single casual blood pressure measurements. The International Chronome Ecological Study of Heart Rate (and blood pressure) Variability in various ethnic groups aims at collecting further evidence regarding the role of blood pressure and heart rate variability in the pathogenesis of cardiovascular events, while also examining any role played by ethnicity and lifestyle-associated factors. (J Assoc Physicians India 2002;50:1416-1425)**

Introduction

Just as genetics spawned the mapping of genes, genomics, the science of the organisms' make-up in time and of its underlying mechanisms, chronobiology, spawned chronomics. It is the science which deals with the mapping and quantitative assessment of broad time structures (chronomes) of biological functions.[1,2] Biological rhythms include the circadian (about 24-hour), circatrigintan (about 30-day) and circannual (about one-year) components, among even lower frequency cycles, including some with about 10-year period in vascular vital signs and one with about 50-year period in stroke mortality. Heart rate, respiratory rate, sleep phases and functional peaks of many enzymes and receptors show also ultradian (with a frequency higher than one cycle per day) variations (e.g., with periods of seconds or minutes). An overswinging of blood pressure along the 24-hour scale is called circadian hyper-amplitude-tension (CHAT). It is associated with a large increase in vascular disease risk, whether or not this condition is accompanied by an elevated chronome-adjusted mean value of blood pressures (MESOR-hypertension).[3-5]

Ayurveda is the science of health and fitness, which recommends several regimens according to the times of the day and night, and seasons, besides mental and behavioural hygiene, factors that may modulate circadian (and other) rhythms.[6-10] Several of he traditional Indian lifestyles are based on *Ayurvidya* (science of life).[9-11] Circadian rhythms are variations which follow about 24-hour pattern.[1,2] One example of individual differences in circadian characteristics can be described in terms of morningness or eveningness. Morningness applies to those who tend to be early risers (getting up between 5 and 7 am) and to re-

*Medical Hospital and Research Centre, Moradabad, India. **Safaric University, Kosice, Slovakia; ***Tokyo Women's Medical University, Tokyo, Japan; +Chronobiology Laboratories, University of Minnesota, Mineapolis, USA.
Received : 30.11.2000; Revised : 28.11.2001;
Accepted : 20.2.2002

tire to bed early (between 9 and 11 pm), and eveningness refers to subjects who prefer both a later time of awakening (between 9 and 11 am) and a later bedtime (11 pm - 3 am).[6]

Apart from differences in alertness, circadian rhythms are also important in many other ways: a basic circadian cell cycle underlies the hours of changing resistance to a variety of stimuli, and plays a critical role in chronotherapy. The same dose of the same agent can have drastically different effects depending solely upon the time when it is administered.[1,2] The same applies to other chronome components, such as about 7-day (circaseptan) and circannual rhythms, which can determine predictably whether an immunomodulator will inhibit or stimulate cancer growth.[2]

The complex operations of life are intrinsically rhythmic with several frequencies, whether or not they are externally synchronized, modulated or otherwise influenced. Spectral coordination is but one aspect of the web of rhythms that maintains life. Beyond being in part intrinsic to the living organism, multifrequency rhythms are distributed throughout it at different organizational levels, including the nervous system (Fig. 1). Well-demarcated and documented structures in organisms play key roles in translating, relaying, transforming, weighing, comparing, integrating and/or implementing timing, and what is equally important, the extent of predictable change within a cycle, gauged by the (double) amplitude. The pineal, the SCN, an intrinsic adrenal cortical and cellular cycle can serve as a pacemaker of several circadian rhythms in a bioperiodic network involving central nervous, notably hypothalamic, pituitary, adrenal, other endocrine and cellular cycles (Figs. 2 and 3).

Ayurveda and Circadian Variation

The description of circadian variations in *Ayurveda* needs to be explored. The tradition of *Ayurveda* started right from *Lord Brahma* and passed through *Daksa Prajapati* and *Indra* to *Bharadwaja* who handed it down to *Atreya*.[7-11] The sage *Bhardwaja* reported that *Ayurveda* is the compendium of knowledge to promote and prolong life, even extending it up to nonperishable lifespan. The latter proposition now

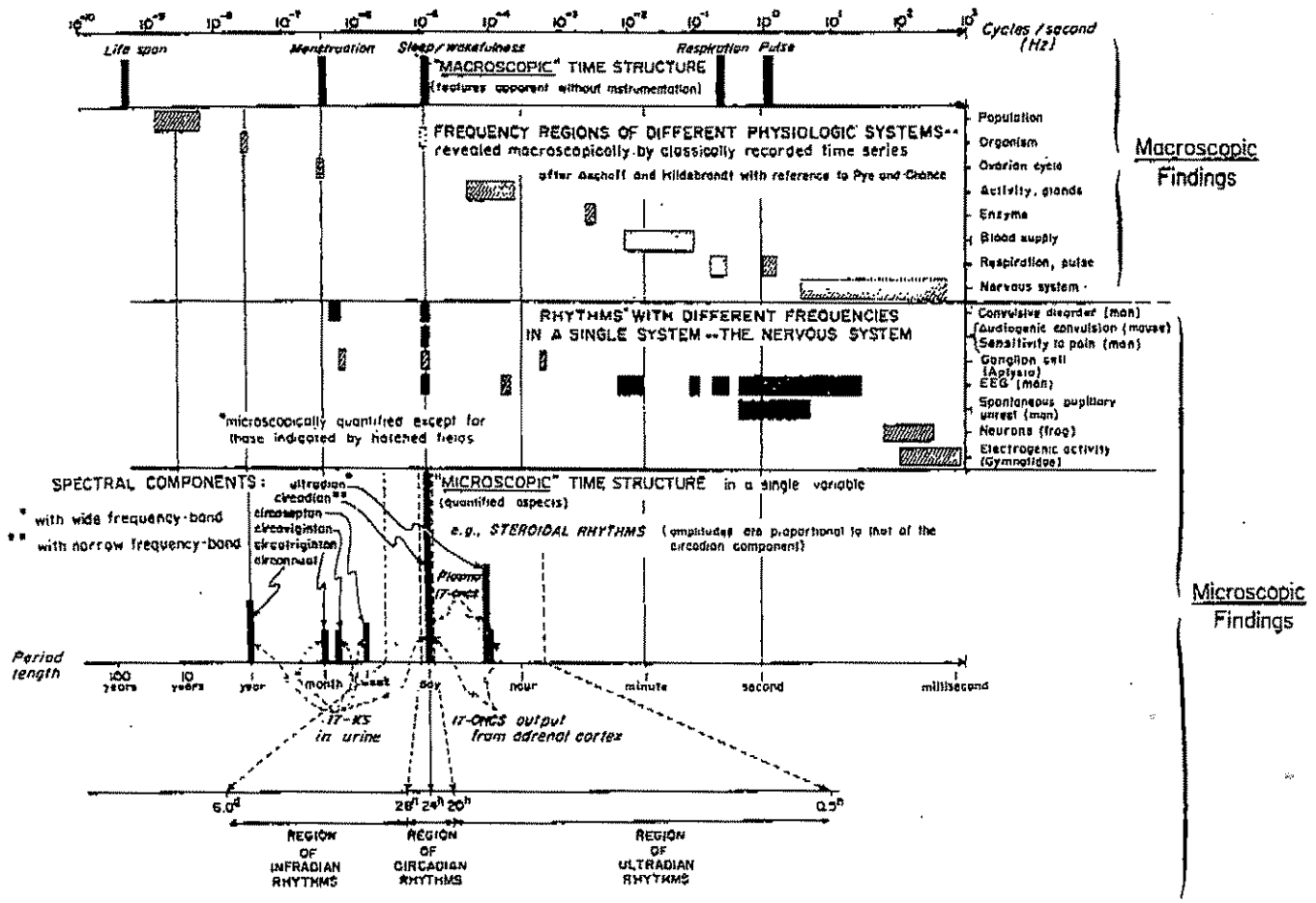

Fig. 1 :

I ENDOCRINE PHASE COMPARISON
- PITUITARY
- *d* ACTH
- *s* ?
- *f* FSH, LH, ICSH
- *a* TSH

II ENDOCRINE RHYTHM GENERATOR
- *d'* ADRENAL CORTEX
- *s'* ?
- *f'* GONAD
- *a'* THYROID

III PERIPHERAL IMPLEMENTATION
- d_1' PHOSPHOLIPID LABELLING
- d_2' RNA LABELLING
- d_3' DNA FORMATION
- d_4' MITOSIS
- s_1' TRANSPLANT REJECTION, ETC.
- f_1' OVULATION, ETC
- a_1' METABOLIC RATE, ETC

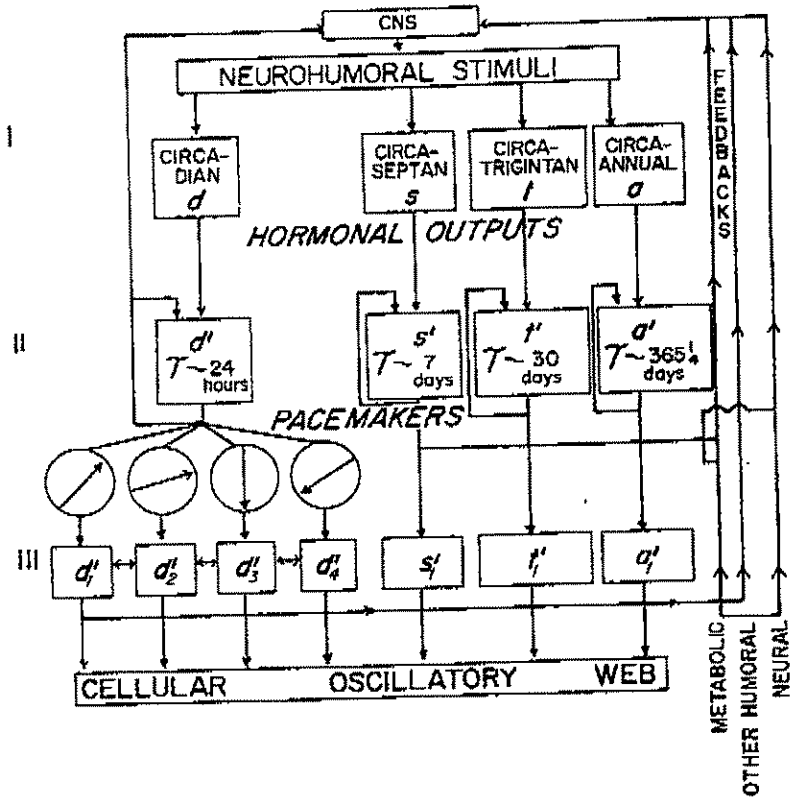

Fig. 2 :

I. SYNCHRONIZERS
SOCIAL SCHEDULES, ENVIRONMENTAL CYCLES

II. TRANSDUCERS
SENSE ORGANS; MUSCLE STRETCH RECEPTORS; CELLULAR RECEPTOR SITES; MEDULLARY NUCLEI; ETC.

III. MODIFIERS
RETICULAR FORMATION; THALAMUS, TECTUM, AND SENSORY CORTEX (CODING); LIMBIC SYSTEM

IV. LOGIC CONTROLLERS
ASSOCIATION CORTEX; FRONTAL CORTEX

V. PACE-RESETTERS
SUPRACHIASMATIC NUCLEUS; OTHER POSSIBLE RELATED AREAS

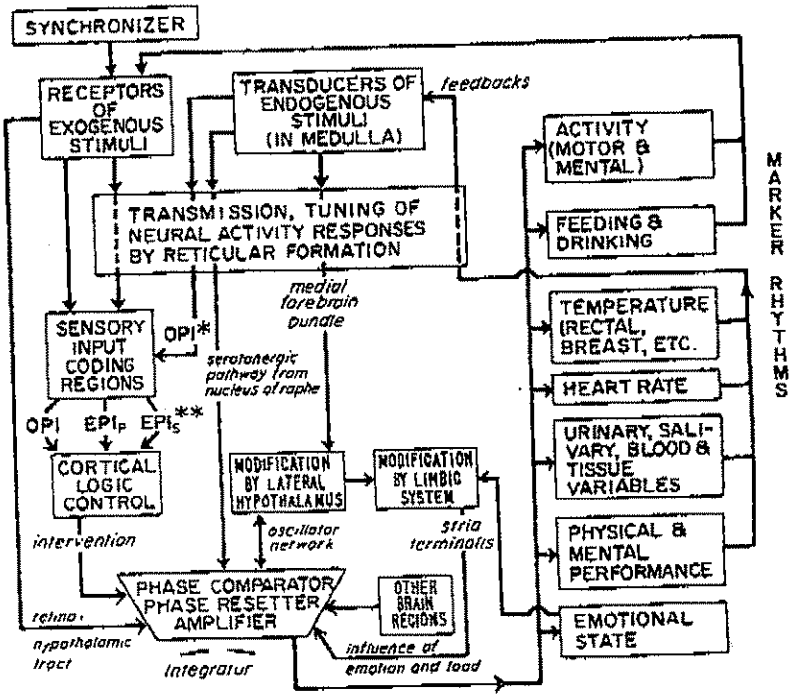

* OPI = Organismic Phase Information (Composite)

** EPI = Environmental Phase Information (Composite); EPI_P denotes physico-chemical and EPI_S denotes sociopsychological. See Halberg, F., Halberg, E., Barnum, C.P., Bittner, J.J.: Physiologic 24-hour periodicity in human beings and mice, the lighting regimen and daily routine. In: Photoperiodism and Related Phenomena in Plants and Animals, R.B. Withrow, Ed., Ed Publ No 55, Amer Assoc. Adv. Sci., 1959, pp 803-878

Fig. 3 :

Table 1 : Recommendations of *Ayurveda* on lifestyle

1.	Early to rise in Brahmamuhurta before sunrise and early to bed between 8-10 pm.
2.	Drinking of a litre of water on waking up which as described as Ushapan.
3.	Cold water bath early in the morning.
4.	Yogic exercises such as Suryanamaskar and/or meditation.
5.	Ingest Haritaki (*Terminalia Chebula*) on an empty stomach.
6.	Use medicinal plant tooth-twig with chewing, brushing and tongue-cleaning steps.
7.	Drink milk with an early and light dinner.
8.	Avoid smoking, tobacco and alcohol and heavy meals.
9.	Have pleasant and optimistic thoughts for onself, others and the whole world.
10.	Prayer for health, wealth and happiness.

Table 2 : Some factors involved in circadian cardiovascular events

1.	The load of facing a new day's problems.
2.	Assumption of an upright posture.
3.	Surge of catecholamines.
4.	Increase in platelet aggregability.
5.	Increase in plasminogen activator inhibitor-1.
6.	Reduced concentrations of heparin.
7.	A nadir of tissue-type plasminogen activator.
8.	A decrease in melatonin concentration.
9.	An increase in 5-hydroxytryptamine or serotonin concentration.
10.	Lower concentrations of antioxidant system and increase in free radical load.
11.	Cholinergic withdrawal.
12.	Rapid increase in heart rate, blood pressure and cardiac output.

sounds less utopian the more we learn about transplantation, stem ells, and robots. It has been revealed in the text of Ayurveda that our ancient experts knew about the ways of prolonging life so as to live up to the age of 100 years.[7-9] *Aachar* (conduct or behaviour and character), *Vichar* (thoughts), *Vyahhar* (interpersonal dealings), *Aahar* (diet) and *Vyayam* (physical activity) are important determinants of health and disease according to *Ayurveda*.[9-11] It is possible that these factors might influence circadian variations.

Apart from the above factors, some important recommendations have been made based on *Ayurvidya* and Indian lifestyle, which may influence circadian rhythms and chronotherapy (Table 1).[9-11] These lifestyle changes may also alter the underlying biochemical parameters, and change the pattern of circadian cardiovascular events (Table 2). Epidemiological studies and intervention trials should be conducted to learn about the influence of these measures on the circadian pattern of cardiovascular events. *Ayurveda* has its beginning in *Atharveda* (Circa 1500-100 BC or 3000 BC). *Charak Samhita* and *Sushruta Samhita* are the most famous treatises of *Ayurveda*. Several others were compiled over the centuries, however, such as *Bhela Samhita*, *Kashyap Samhita*, *Agnivesh Tantra*, *Vaghbhata's Ashtang Hridaya* (600 AD), and *Madhav Nidan* (700 AD). Ayurvedic texts were translated into *Greek* by *Cnidos* (300 BC), into *Tibetan* and *Chinese* (300 AD), *Persian* (700 AD) and *Arabic* (800 AD). The *Ayurvedic* tradition continued as a vigorous and expanding tradition down to the 16th century, after which no further progress has been observed.

Mechanisms of Circadian Variations

Circadian rhythms are coordinated in part by the suprachiasmatic nuclei (SCN), tiny clumps of cells present in the brain.[6] The SCN function as an amplitude and timing mechanism (Figs. 4 and 5) and are influenced by daily changes in sunlight and darkness.[6,12-14] Blood pressure starts to increase prior to awakening, and is followed by an increased secretion of catecholamines. Melatonin secretion is increased by night and reaches a maximum during mid-sleep. Whereas the SCN use the information about light and darkness from the eyes, and have their own dedicated pathway of nerves, the retino-hypothalamic tract carrying the visual information to the brain, many circadian rhythms persist under conditions of constant temperature and illumination. Under usual conditions, circadian rhythms are synchronized by the 24-hours schedule of light alternating with darkness. Circadian changes in the SCN affect the nervous system and are related to daily fluctuations in many body functions. Nerve fibers and secretions influence pituitary functions and other hormonal secretions. There is evidence that circadian rhythms appear to be cell autonomous and involve periodic gene expression. It has been repeatedly shown that the timing of circadian rhythms can be manipulated by the lighting schedule. Studies have also implicated the cyclic AMP pathway in mediating signal transduction. It is possible that the SCN may be influenced by environmental factors. Interactions of the SCN with pineal and pituitary function and adrenal secretions coincide with a major surge in catecholamines, and with an increase in heart rate and blood pressure. Physical and mental exertion, excess

COSINOR PLOT OF ZERO AMPLITUDE TEST FROM THE CIRCADIAN POPULATION RHYTHM OF SYSTOLIC ARTERIAL PRESSURE IN SHAM-OPERATED (C) AND SCN-LESIONED (L) MALE WISTAR RATS*

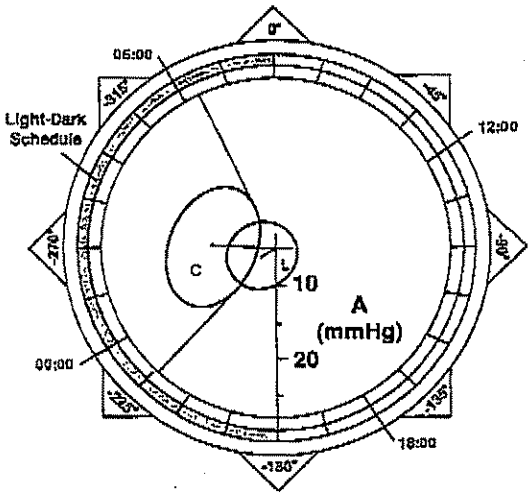

* The absence of circadian population rhythm is illustrated by the inclusion of the center of the plot within the amplitude-acrophase ellipse after SCN lesions

CC 7/91

Fig. 4a :

COSINOR PLOT OF ZERO AMPLITUDE TEST FROM THE CIRCADIAN POPULATION RHYTHM OF HEART RATE IN SHAM-OPERATED (C) AND SCN-LESIONED (L) MALE WISTAR RATS

P < 0.05 for Each Group

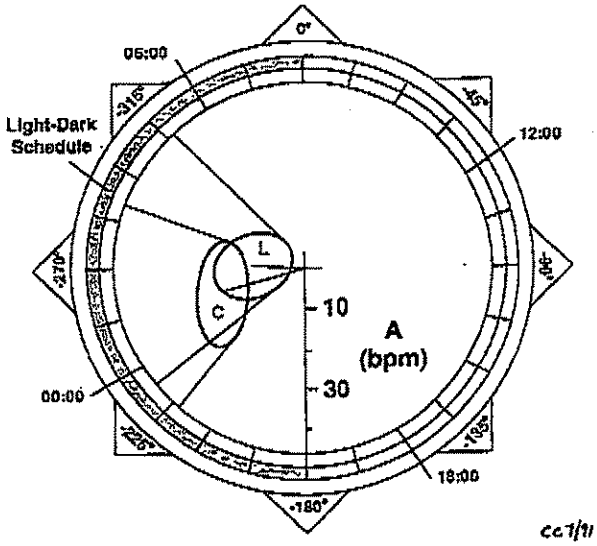

CC 7/91

Fig. 4b :

CIRCADIAN RHYTHM ALTERATION RATHER THAN OBLITERATION AFTER LESIONING OF SUPRACHIASMATIC NUCLEI (SCN)

Circadian Temperature Patterns in Fischer Rats without (S) or with Unilateral (U) or Bilateral (B) Lesions of SCN

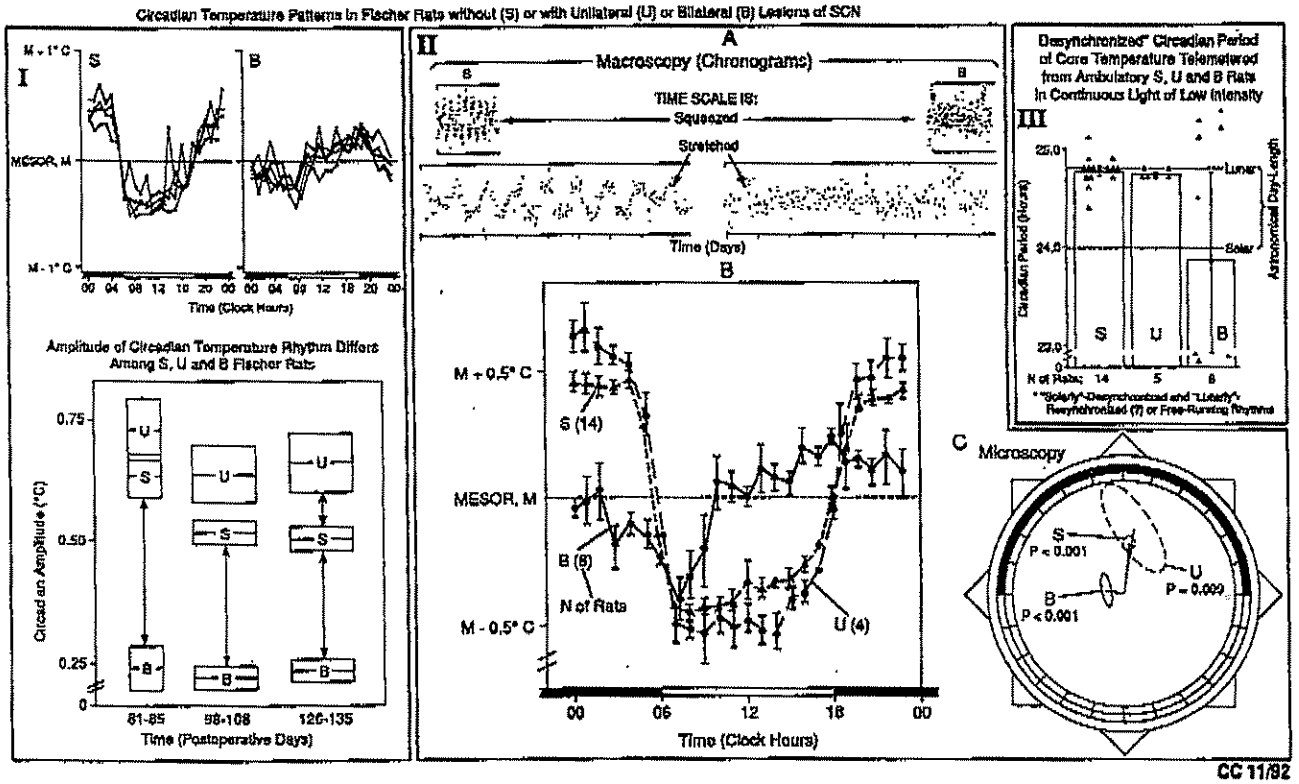

CC 11/92

Fig. 5a

PERSISTENT, ALBEIT ALTERED, CIRCADIAN RHYTHMICITY OF ^{3}H-TdR INCORPORATION INTO DNA OF DIFFERENT ORGANS AND OF MITOTIC INDEX OF CORNEAL EPITHELIUM OF BD_2F_1 FEMALE MICE AFTER BILATERAL LESIONING OF SUPRACHIASMATIC NUCLEI (SCN) (ROWS 1 - 3); PERSISTENCE OF ALTERED RHYTHM SEEN IN ETHANOL (ROW 4; LEFT) BUT NOT WATER (ROW 4; RIGHT) CONSUMPTION AFTER BILATERAL LESIONING

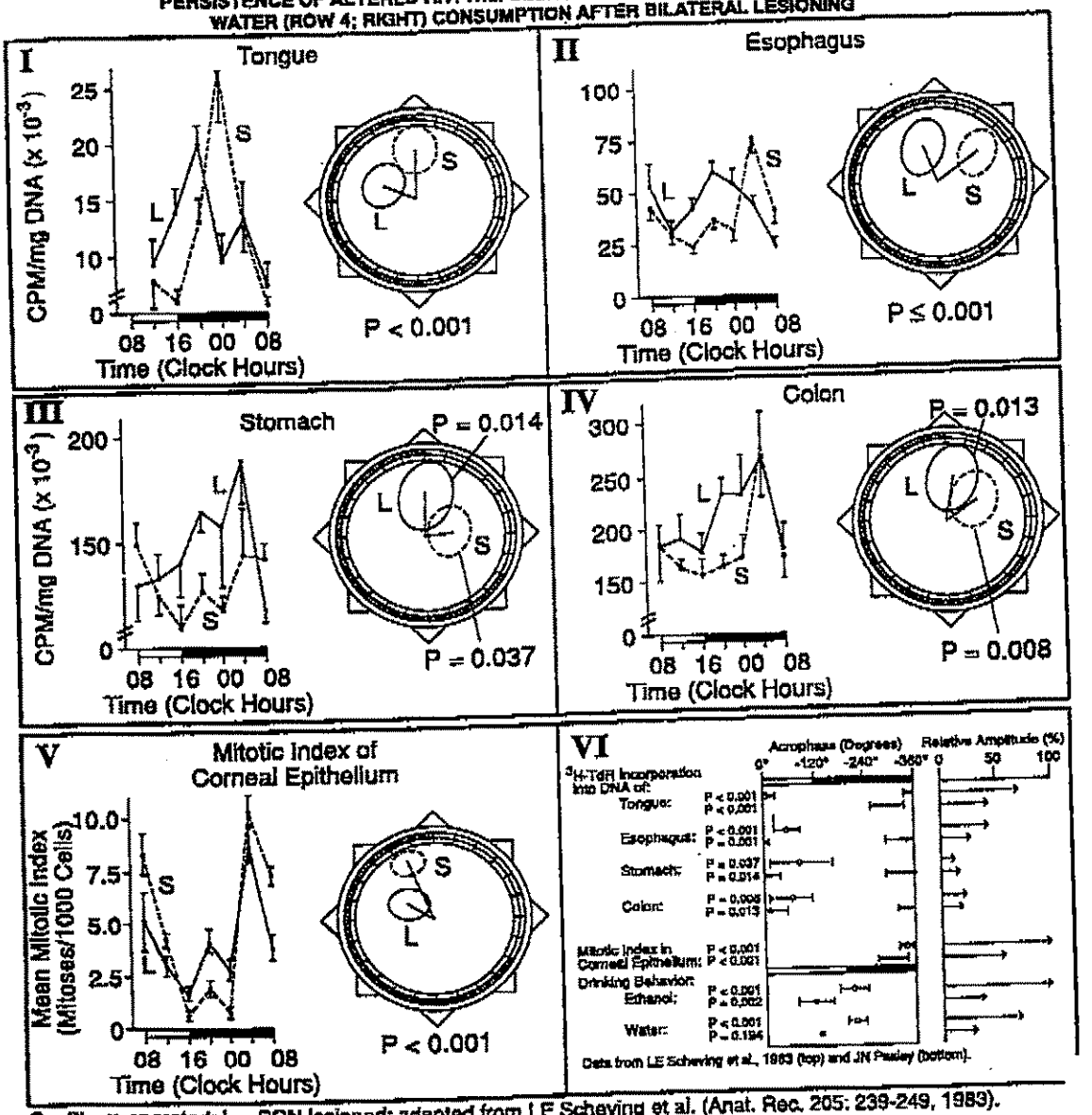

S = Sham-operated; L = SCN lesioned; adapted from LE Scheving et al. (Anat. Rec. 205: 239-249, 1983).

DRINKING BEHAVIOR

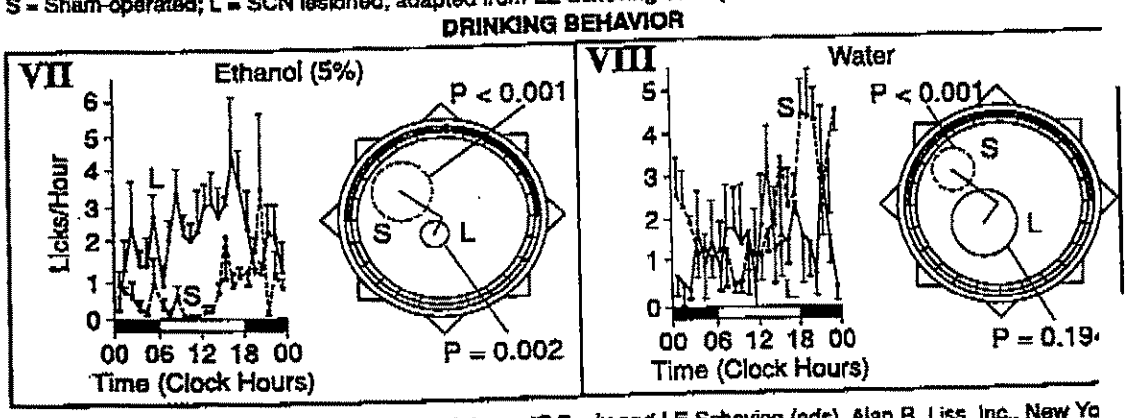

Data from JN Pasley. (Advances in Chronobiology, JE Pauly and LE Scheving (eds), Alan R. Liss, Inc., New Yo Part B. pp. 467-471, 1987).

Fig. 5b :

of alcohol, heavy meals, breathing disorders, QT dispersion, and increased lipopretein(a) concentrations are thought to be important in determining the circadian pattern of cardiac events, notably in relation to pathogenesis.[15-27]

Clinical Evidence

Several studies published from various countries have demonstrated an increased prevalence of cardiovascular events from 8.00 am to 11.00 am with a ratio of approximately 2:1.[16-20] In a recent study from India involving 605 patients with coronary artery disease, among those who had Q-wave infarction (n=174), 39% had the onset between 6.00 am to 12.00 noon.[16] A secondary peak in the onset of AMI in the late evening between 6 pm to 12 pm has also been reported in many studies. The evening peak was also observed in a Multi-centre Investigation of Limitation of Infarct size Study (MILIIS)[18] and in a recent Cardiac Arrhythmia Suppression Trial (CAST).[20] The analysis of various subsets of coronary events (unstable angina, sudden cardiac death) in the Indian study revealed a circadian rhythm similar to that observed for all study subjects, with a peak in the second quarter of the day. These observations are similar to findings in other studies showing an increase in the onset of sudden death and transient ischemia in the first three hours after awakening. In the Indian study, a statistically significantly higher incidence of onset of symptoms was observed between 6.00 pm to 12.00 pm in patients with diabetes mellitus. No such association was reported for the total number of subjects.

Myocardial ischemia and angina showing ST-segment depression and platelet aggregation have also been observed quite frequently in the first quarter of the day.[28] Angina pectoris has also been associated with lower exercise thresholds in the morning than in the afternoon.[29] Ambulatory electrocardiographic monitoring in chronic stable angina patients has demonstrated a statistically significantly greater number of episodes of silent ischemia in the second quarter of the day. A better understanding of the factors influencing the changing patterns of ischemic activity over the 24-hour scale may help determine the mechanisms responsible for transforming a stable condition into an acute myocardial infarction (AMI) and/or a sudden cardiac death.

Circadian Variation and Thrombosis

In unstable angina, the atherosclerotic plaque has thin, fibrous and fragile cap, which is very unstable due to fissures, ulceration, inflammation and haemorrhage. The major pathophysiologic event underlying AMI and unstable angina is coronary thrombosis, which is non-occlusive in unstable angina. The possibility of thrombosis increases through a number of local mechanisms, including enhanced platelet activation, decreased prostaglandin-I_2 synthesis and release and decreased concentrations of plasminogen activator. Systemic abnormalities in hemostatic mechanisms may also predispose thrombosis. Increased concentrations of serum fibrinogen and plasminogen activator inhibitor (PAI) coupled with decreased t-PA antigen and activity may account for enhanced thrombosis and decreased capability to lyse blood clots in these patients. Circadian variations in plasma fibrinogen, platelet aggregation, partial thromboplastin time and thrombin time have been compared in patients with coronary artery disease and healthy controls.[30,31]

There is evidence that in vitro platelet response to aggregating stimuli is accentuated during the morning hours, particularly after arising from sleep. Similarly, systemic fibrinolytic activity shows daily fluctuations reaching a nadir around 8 am and reaching a peak between 5 and 8 pm, which may become worse after a heavy meal. Higher plasminogen activator inhibitor concentrations may occur between 6 and 8 am, and their potential influence is now receiving increasing attention. Reperfusion is four times less likely when t-PA for AMI is administered between midnight and noon, compared to patients treated at other times of the day. Such circadian response may be related to elevated concentrations of plasminogen activator inhibitor during that time, which may influence the therapeutic response to anticoagulants and thrombolytic agents.

Changes in Cardiovascular System

It is possible that increases in myocardial oxygen demand due to physical and mental triggers during daily activities may be important in the onset of cardiac events and contribute to its circadian pattern. The susceptibility of a plaque to rupture appears to be due to dynamic changes in the plaque constituents, its biochemistry, biology and pathology, its blood supply and the functional integrity of the overlying endothelium and the thinness of the fibrous cap of the unstable plaque. The onset of the disease may begin with physical or mental exertion, which triggers a hemodynamic change sufficient to cause plaque rupture. The surge in arterial pressure and heart rate that occurs in the early morning is further enhanced by increases in physical and mental load that may lead to plaque rupture. Increase in coronary artery tone may also further

AMONG RISK FACTORS, AN EXCESSIVE CIRCADIAN BLOOD PRESSURE (BP) AMPLITUDE (A) *RAISES* THE RISK OF ***ISCHEMIC STROKE*** *MOST*

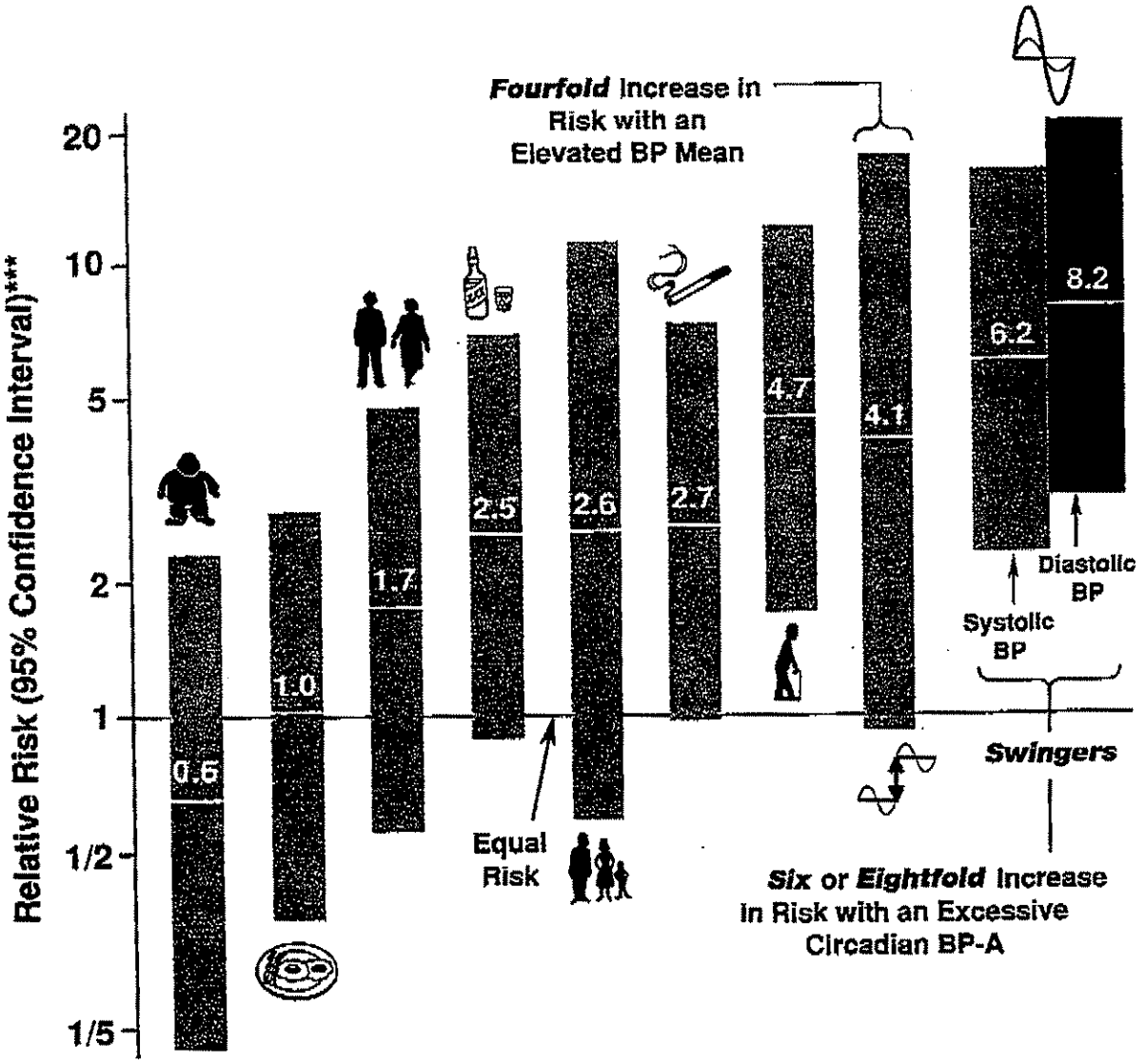

Risk Factor:	BMI* > 25 kg/m²	High Cholesterol	Gender (Male)	Drinking**	Family History of High BP	Smoking	Age > 60 years	SBP-MESOR > 130 mmHg	BP-A > 90th Percentile
N of Patients									
Risk Present:	88	148	152	102	207	80	52	176	32/25
Absent:	209	149	145	195	90	217	245	121	265/272

* BMI (Body Mass Index) correlates positively with BP-MESOR.

** Drinking increases BP-A.

*** Relative Risk (RR) is risk of patients with risk factor (e.g., smoking or excessive BP-A) present relative to risk of patients with risk factor absent (whose RR = 1) computed as a ratio of incidences.

Fig. 6 :

CC 11/94

decrease the flow produced by fixed stenosis and increased blood viscosity and enhanced platelet activation, aggregation and coagulation. These changes may also be mediated by activities of the suprachiasmatic nuclei, as mentioned earlier.[6,7]

Heart Rate and Blood Pressure Variability

Around the clock, serial recordings of blood pressure and heart rate in the ward or clinic may be analyzed by computer-implemented curve-fitting to assess the about 24-hour (circadian) variation, among other rhythmic and chaotic components of the time structure (chronome) of these variables. This approach is particularly important to quantitatively assess blood pressure and heart rate variability.

A causal blood pressure measurement accompanied by another check-up in two years may be misleading.[32] An overswinging of the blood pressure along the 24-hour scale may then be missed. This excessive circadian amplitude, called circadian hyper-amplitude-tension (CHAT),[3-5] constitutes a new disease risk syndrome, warranting screening, diagnosis and treatment. With or without an elevation in the chronome-adjusted mean value (MESOR), the circadian double amplitude (a measure or the extent of predictable change within a day) of blood pressure is a predictor of vascular disease risk. An excessive amplitude is associated with an elevated left ventricular mass index in a retrospective chrono-meta-analysis of data from 424 patients[33] and with an increase in morbid events in a prospective 6-year follow-up study of 297 patients,[3-5,34] and precedes an elevation in the MESOR of blood pressure in the laboratory model of the stroke-prone spontaneously hypertensive rat (4; see also 35). CHAT was found to be associated with a 720% increase in the risk of cerebral ischemic events (such as a stroke),[3-5,32,36,37] Fig. 6. These results suggest that single measurements of blood pressure should be replaced by an around the clock profile for a week or longer. Self-measurements at 3-hour intervals during waking, with one additional measurement around mid-sleep, are acceptable when an ambulatory instrument is unavailable.[4]

Autonomic nervous system dysfunction has also been described in association with circadian and infradian (with a frequency lower than one cycle per day) patterns of electrocardiograms and blood pressure, which are important in the pathogenesis of cardiovascular events.[27,38]

Meditation, n-3 fatty acids, antioxidants, coenzyme Q10, estrogen and drugs, such as beta blockers and ACE-inhibitors, may also influence blood pressure and heart rate variability.[39-44] The International Chronome Ecological Study, which is underway in various ethnic groups (Indians, Russians, Japanese, Chinese, Belgian, Italian, Norwegians and Americans), aims at providing more evidence regarding the role of lifestyle factors and ethnicity in the pathogenesis of heart rate and blood pressure variability.

References

1. **Halberg F.** Chronobiology. *Annu Rev Physiol* 1969;31:657-725.
2. **Cornelissen G, Halberg F.** Introduction to chronobiology. Medtronic Chronobiology Seminar, 1994:52.
3. **Otsuka K, Cornelissen G, Halberg F, Oehlerts G.** Excessive circadian amplitude of blood pressure increases risk of ischemic stroke and nephropathy. *J med Eng Technol* 1997;21:23-30.
4. **Halberg F, Cornelissen G, Halberg J, *et al.*** Circadian hyper-amplitude-tension, CHAT: a disease risk syndrome of antiaging medicine. *JAAM* 1998;1:239-59.
5. **Cornelissen G, Halberg F, Schwartzkopff O, *et al.*** Chronomes, time structures, for chronobioengineering for "a full life". *Biomed Instrum Technol* 1999;33:152-87.
6. **Weible L, Follenius M, Brandenberger G.** Biologic rhythms: their changes in night-shift workers. *Press Med* 1999;28:252-8.
7. **Lele RD.** Ayurveda (ancient Indian system of medicine) and modern molecular medicine. *J Assoc Physicians India* 1999;47:625-8.
8. **Vaidya AB, Bhatt MA.** Chronobiology of ischaemic heart disease events: relevance of ancient insights in human life-style. *J Assoc Physicians India* 1999;47:629-30.
9. **Charaka Samhita.** (Charaka, 600 BC), translated by Sharma PV. Delhi: Chaukhamvbha Orientalia, Varanasi. 1981.
10. **Sushruta Samhita.** (Sushruta, 600 BC), translated by KL Bhisagrathna. Chaukhamba Sanskrit Series Office, Varanasi 1991; 1-3.
11. **Atharveda Samhita.** (3000-5000 BC), Whitney WD, editor. Charles Pockwell, Lanman, Harvard Oriental series, Delhi: Motilal Banarsidass, 1984.
12. **Stoynev AG, Penev PD, Ikonomov OC, Halberg F.** Suprachiasmatic nuclei lesions eliminate the group circadian rhythm of systolic arterial pressure but not of heart rate in rats. *Acta Physiol Pharmacol Bulg* 1996;22:1-6.
13. **Stoynev AG, Penev PD, Ikonomov OC, Usunoff KG.** Effect of transplantation of embryonic anterior hypothalamic tissue from spontaneously hypertensive rats of normotensive Wister rats on circadian rhythms of systolic arterial pressure and heart rate. *Acta Physiol Pharmacol Bulg* 1996;22:71-5.
14. **Witte K, Schnecko A, Buijs RM, *et al.*** Effects of SCN lesions on circadian blood pressure rhythm in normotensive and transgenic hypertensive rats. *Chronobiol Int* 1998;15:135-45.
15. **Dharmadhikari AV, Mahajan AU, Bansal NO, Pathak L.** Circadian rhythm in ischaemic heart disease. *J Assoc Physicians India.* 1998;46:173-5.

16. **Mehta SR, Das S, Karloopia SD, Mathur P, Dham SK, Raghunathan D.** The circadian pattern of ischaemic heart disease events in Indian population. *J Assoc Physicians India* 1998;46:767-71.

17. **Fujino T, Katou J, Fujita M, *et al.*** Relationship between serum lipoprotein(a) level and thrombin generation to the circadian variation in onset of acute myocardial infarction. *Atherosclerosis* 2001;55:171-8.

18. **Muller JE, Stone PH, Zoltan G, *et al.*** The MILLIS study group. Circadian variation in the frequency onset of acute myocardial infarction. *N Engl J Med* 1985;313:1315-22.

19. **Thompson DR, Blandford RL, Sutton TW, Merchant PR.** Time of onset of chest pain in acute myocardial infarction. *Int J Cardiol* 1985;7:139-46.

20. **Peters RW, Zoble RG, Liebson PR, Pawitan Y, Brooks MM, Proschan M.** Identification of a secondary peak in myocardial infarction onset 11 to 12 hours after awakening: the Cardiac Arrhythmia Suppression Trial (CAST) experience. *J Am Coll Cardiol* 1993;2:998-1003.

21. **Montano N, Porta A, Malliani A.** Evidence of central organization of cardiovascular rhythms. *Ann N Y Acad Sci* 2001;940:299-306.

22. **Numminen H, Syrjala M, Benthin G, Kaste M, Hillbom M.** The effect of acute ingestion of a large dose of alcohol on the hemostatic system and its circadian variation. *Stroke* 2000;31:1269-73.

23. **Yetkin E, Senen K, Ileri M, *et al.*** Diurnal variation of QT dispersion in patients with and without coronary artery disease. *Angiology* 2001;52:311-6.

24. **Aboyans V, Cassat C, Lacroix P, *et al.*** Is the morning peak of acute myocardial infarction's onset due to sleep-related breathing disorders? A prospective study. *Cardiology* 2000;94:88-92.

25. **Smolensky M, Halberg F, Sargent II F.** Chronobiology of the life sequence. In: Itoh S, Ogata K, Yoshimura H, editors. Advances in climatic physiology. Tokyo: Igaku Shoin. 1972:281-318.

26. **Reinberg A, Gervais P, Halberg F, *et al.*** Mortality of adults: circadian and circannual rhythms in a Paris Hospital and in France. *Nov Presse Med* 1973;2:289-94.

27. **Cornelissen G, Breus TK, Bingham C, *et al.*** Beyond circadian chronorisk: worldwide circaseptan-circasemiseptan patterns of myocardial infarctions, other vascular events, and emergencies. *Chronobiologia* 1993;20:87-115.

28. **Tofler GH, Brezinski DA, Schafer HI, *et al.*** Concurrent morning increase in platelet aggregability and the risk of myocardial infarction and sudden cardiac death. *N Engl J Med* 1987;316:514-8.

29. **Braunwald E.** Unstable angina: an etiologic approach to management. *Circulation* 1998;98:2219-22.

30. **Zaslavskaya RM.** Circadian rhythms of blood clotting system: norm and pathology and therapy problems. Moscow: Quarted Science Publishers 1994;452.

31. **Zaslavskya RM, Logvinenko SI, Teibloom MM, Halberg F.** Time organization of blood coagulation in patients with rheumatic heart disease involving circulation insufficiency. *J Clin Med (Moscow)* 1996;8:25-9.

32. **Cornelissen G, Halberg F.** Impeachment of casual blood pressure measurements and the fixed limits for their interpretation and chronobiologic recommendations. *Ann N Y Acad Sci* 1996;783:24-46.

33. **Otsuka K.** chronome and Janus-medicine. Heart rate variability (HRV) and BP variability (BPV) from a veiwpoint of chronobiology and ecology. Tokyo: Medical Review. 1998;213.

34. **Chen CH, Ting CT, Lin SJ, *et al.*** Relation between diurnal variation of blood pressure and left ventricular mass in a Chinese population. *Am J Cardiol* 1995;75:1239-43.

35. **Kumagai Y, Shiga T, Sunaga K, Cornelissen G, Ebihara A, Halberg F.** Usefulness of circadian amplitude of blood pressure in predicting hypertensive cardiac involvement. *Chronobiologia* 1992;19:43-58.

36. **Otsuka K, Cornelissen G, Halberg F.** Circadian rhyhtmic fractal scaling of heart rate variability in health and coronary artery disease. *Clin Cardiol* 1997;20:631-8.

38. **Halberg F, Tamura K, Cornelissen G.** Chronobioengineering toward a cost-effective quality health care. *Front Med Biol Eng* 1994;6:83-102.

39. **Watanabe Y, Cornelissen G, Halberg F, *et al.*** Chronobiometric assessment of autogenic training effects upon blood pressure and heart rate. *Percept Mot Skill* 1996;83:1395-410.

40. **Trauma K, Kohno I, Saito Y, *et al.*** Antihypertensive individualized therapuetic strategy. *Difesa Sociale* 1991;6:109-24.

41. **Halberg F, Cornelissen G.** Resolution from a meeting of the International Society for Research on Civilization Diseases and the Environment (New SIRMCE Confederation), Brussels, Belgium, March 17-18, 1995: Fairy tale or reality? Medtronic Chronobiology Seminar #8, April 1995.

42. **Singh RB, Niaz MA, Cornelissen G, et al.** Circadian rhythmicity of circulating vitamin concentration. Scripta Medica (BRNO), 2001;74:93-6.

43. **Singh RB, Cornelissen G, Siegelova J, Fiser B,Homolka P, Halberg F.** About half weekly pattern of blood pressure and heart rate in men and women of India. Scripta Medica 2002; 75 : 125-8.

44. **Pella D, Pella J, Singh RB, Thomas N, Tomlinson B.** Brain-heart connection and the risk of cardiovascular disease. In : Cardiovascular Disease, 2002 by Mitro P, Pella D, Ryber R, Valocik G, Monduzzi Editore, Bolongna, Italy 2002; p 325-38.